DXRL-PCB Relay
Connection Diagram Example R3

ELM Video Technology, Inc.
"Innovative DMX and MIDI Products"
www.elmvideotechnology.com

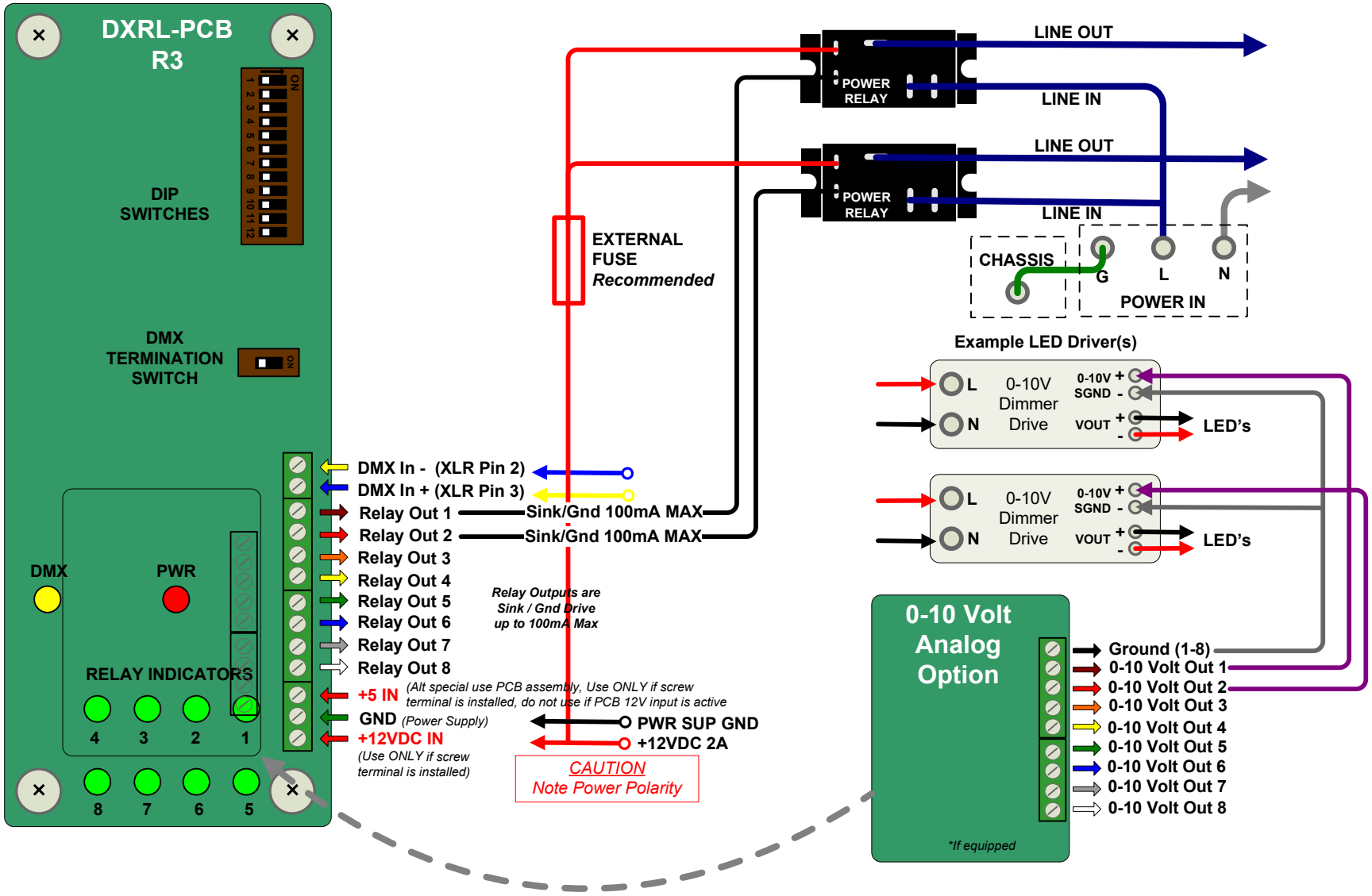

ELM Video Technology, Inc. Copyright 2024 to present

www.elmvideotechnology.com